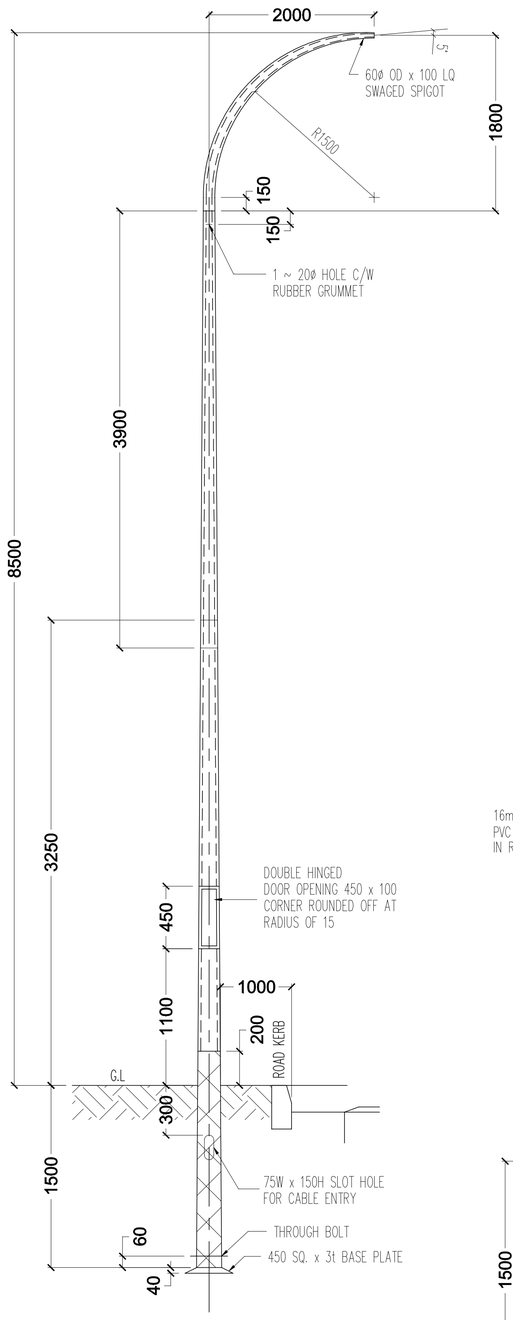

DETAILS OF 8.5M OCTAGONAL STREET LIGHTING POLE C/W 2.0M SINGLE BRACKET (PLANTED TYPE)

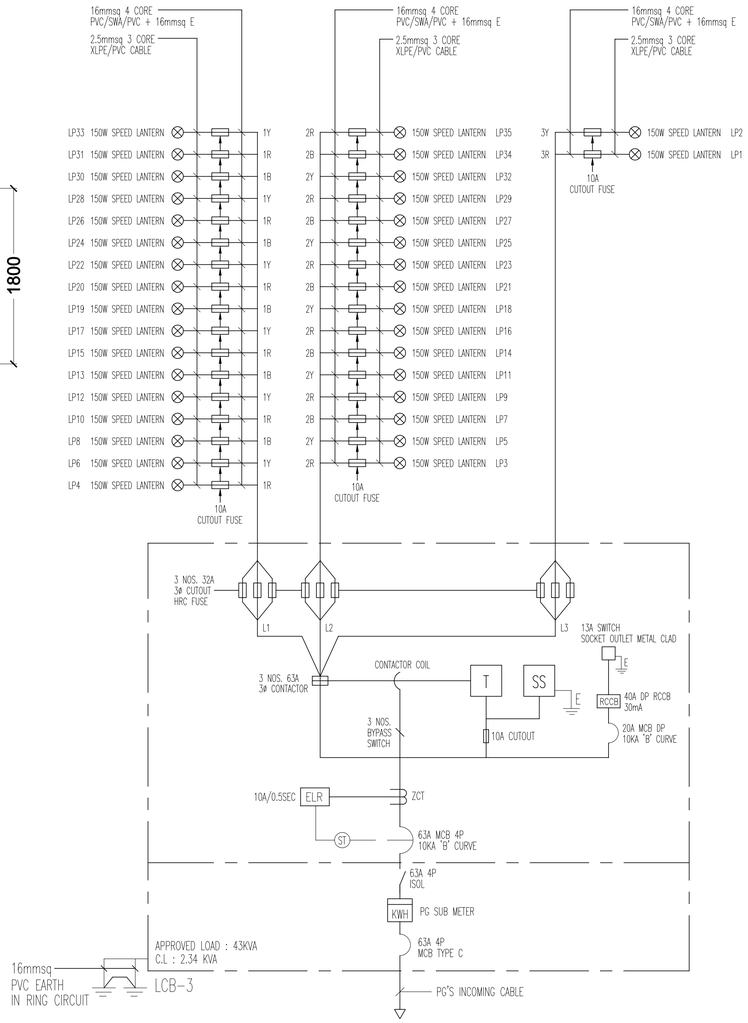

SINGLE LINE DIAGRAM FOR STREET LIGHTING

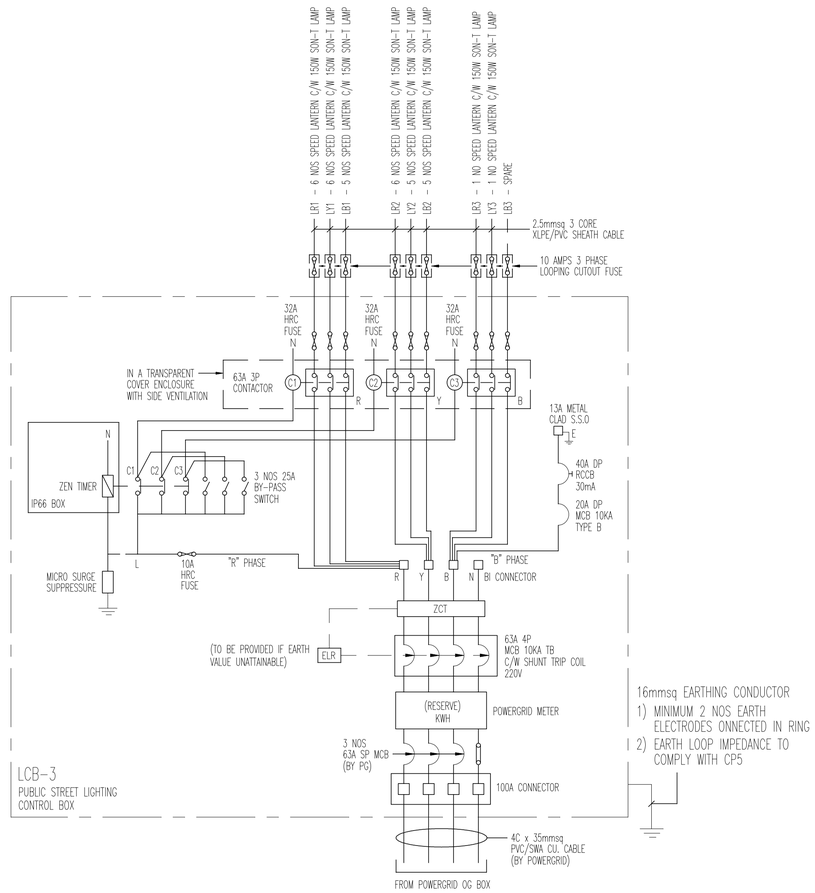

SINGLE LINE DIAGRAM FOR CONTROL BOX

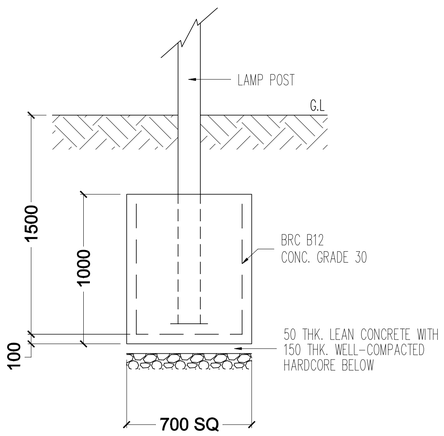

FOOTING DETAIL

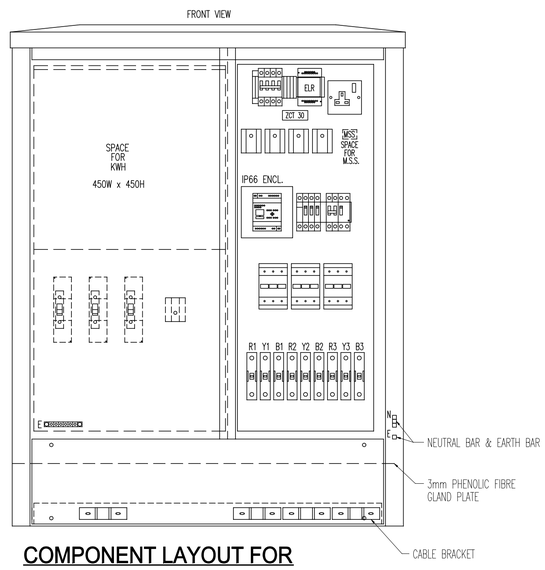

COMPONENT LAYOUT FOR STREET LIGHTING CONTROL BOX

ITEM No.	DESCRIPTION	QTY.	BRAND
1	MCB 63A 4P 10KA B CURVE	01	HAGER
2	FUSE CARRIER 10A (500V) C/W FUSE	01	LEGRAND
3	BY-PASS ISOLATOR 25A SP	03	HAGER
4	CONNECTOR N6	04	EMANN
5	MCB 20A 2P 10KA B CURVE	01	HAGER
6	RCCB 40A 2P 30MA	01	HAGER
7	SWITCH SOCKET OUTLET 13A 1GANG	01	PDL
8	CONTACTOR 65A 3P AC3	03	ABB
9	FUSE CARRIER 32A (500V) C/W FUSE	09	PLK
10	MICRO SURGE SUPPRESSOR 4.5kA AT 230/440V	01	EFI ELECTRO
11	ZEN DIGITAL TIMER	01	OMRON
12	IP66 ABS EMPTY ENCLOSURE (INDOOR TYPE)	01	HI-BOX
13	PVC ENCLOSURE 8 WAYS	01	ABC
14	PVC ENCLOSURE 4 WAY W/SEALABLE	01	ABC
15	MCB SHUNT TRIP 230V-415V AC AA0V-130V DC	01	HAGER
16	EARTH LEAKAGE RELAY 10A C/W ZCT 35	01	HAGER
17	TEAKWOOD	01	LOCAL

SIZE OF OG BOX:
940(W) x 1200(H) x 310(D)
COLOUR COAT : PR 253 & PR 985

LIST OF COMPONENT LAYOUT

LEGEND

INDALUX IVH 1 STREET LANTERN C/W 1 X 150W SON-T LAMP ON 8.5m POLE 2M ARM

STREET LIGHTING CONTROL BOX

NOTE : ALL STREET LIGHTING INSTALLATION SHALL WITH WITH LTA'S REQUIREMENT.

REV.	DATE:	BY:	AMENDMENT

OWNER:

SINGAPORE LAND AUTHORITY
LAND ASSET MANAGEMENT SERVICE DIVISION
ESTATE AND INFRASTRUCTURE TEAM
55 NEWTON ROAD
#12-01
SINGAPORE 307987

M&E CONSULTANT:

KJ GROUP CONSULT
Building Services (Mechanical & Electrical) Consultancy
NO. 212A TANJONG KATONG ROAD
SINGAPORE 437005
TEL: 6345 6909 FAX: 6345 6903
E-mail: kjgroup@singnet.com.sg

PROJECT TITLE :

PROPOSED ROAD INFRASTRUCTURE & SERVICES, 15.5M SPAN RC BRIDGE, PUB SUBSTATION AND ANCILLARY WORKS FOR AQUARIUM FISH EXPORT CENTRE AND INTERIM AGRICULTURE USE ON LOTS 2611X(PT), 2613C(PT), 229K(PT), 416W, 1242M(PT), 233N(PT), 232K(PT), 230T(PT) & 231A MK 19 AT LORONG CHENCHARU

DRAWING TITLE :

STREET LIGHTING

SINGLE LINE DIAGRAM FOR CONTROL BOX & STREET LIGHTING, STREET LIGHTING POLE LAYOUT, LIST & COMPONENT LAYOUT FOR STREET LIGHTING CONTROL BOX

SERVICE :

ELECTRICAL INSTALLATION

DESIGNED BY : LYK	DRAWN BY : TCY
CHECKED BY : LYK	APPROVED BY : LYK
SCALE : AS SHOWN	DRAWN DATE : DEC 2009
DRAWING NO. : KJ/P/001/STL02	REV NO. : 0

THIS DRAWING IS COPYRIGHT AND UNAUTHORISED OR MISUSE OF THIS DRAWING IS PROHIBITED WITHOUT THE CONSENT OF **KJ GROUP CONSULT.**